$$S_{\mathrm{x}} = \frac{R_{\mathrm{x}}}{R_{\mathrm{s}}} \cdot \frac{G_{\mathrm{s}}}{G_{\mathrm{x}}} \cdot S_{\mathrm{s}} = \frac{\dfrac{V_{\mathrm{x}} - V_{\mathrm{d,x}}}{V_{\mathrm{mx}} - V_{\mathrm{d,mx}}}}{\dfrac{V_{\mathrm{s}} - V_{\mathrm{d,s}}}{V_{\mathrm{ms}} - V_{\mathrm{d,ms}}}} \cdot \frac{G_{\mathrm{s}}}{G_{\mathrm{x}}} \cdot S_{\mathrm{s}} \ [\mathrm{A \cdot W^{-1}}]. \tag{3.27}$$

This is the working form of the measurement equation. Note that it still has the general form

$$S_{\mathrm{x}} = \frac{Y_{\mathrm{x}}}{Y_{\mathrm{s}}} \cdot S_{\mathrm{s}} \ [\mathrm{U \cdot input\ units^{-1}}]. \tag{3.18}$$

Depending on how the monochromator wavelength scale is calibrated, a correction term may be needed when the responsivity curves of the test and working standard detectors have different slopes. If the centroid wavelength of the bandpass is used to calibrate the monochromator wavelength scale, then there is no correction term. But if the peak wavelength of the bandpass is used, then eq (3.27) requires a correction term. Thus the measurement equation becomes

$$S_{\mathrm{x}} = \frac{R_{\mathrm{x}}}{R_{\mathrm{s}}} \cdot \frac{G_{\mathrm{s}}}{G_{\mathrm{x}}} \cdot S_{\mathrm{s}} + C_{\mathrm{bw}} \ [\mathrm{A \cdot W^{-1}}], \tag{3.28}$$

where C_{bw} is a correction term due to the bandpass of the monochromator and is referred to as the "bandwidth-effect." Like the stray light term, the bandwidth-effect is small for this system and is ignored in the "routine" measurement equation. The bandwidth-effect is analyzed in section 7.1.2 as an uncertainty term and included in the uncertainty estimate.

4. Equipment Description

In this section, the Visible to Near-Infrared Spectral Comparator Facility (Vis/NIR SCF) and Ultraviolet Spectral Comparator Facility (UV SCF) components are described along with the associated electronics.

4.1 Visible to Near-Infrared (Vis/NIR) Comparator Description

The Visible to Near-Infrared Spectral Comparator Facility (Vis/NIR SCF) is a monochromator-based system that typically measures the uniformity and absolute spectral responsivity of photodiodes in the 350 nm to 1800 nm spectral region. The Vis/NIR SCF operates from 350 nm to 1100 nm using silicon photodiodes as working standards and from 700 nm to 1800 nm using germanium photodiodes as working standards.

The Vis/NIR SCF uses the direct substitution method and automated translation stages to position the photodetectors for measurement. The test detectors as well as the working standards are fixed onto optical mounts that rotate and tilt for accurate alignment. A variety of sources can be selected. Typically a 100 W quartz-halogen lamp is used as the source in the Vis/NIR SCF. A shutter is located just after the monochromator exit slit. A monitor detector located after the monochromator measures source fluctuations. The detectors and the exit optics are enclosed in a

light tight box. A diagram of the Vis/NIR SCF is shown in figure 4.1. Each of the primary components is now described in greater detail.

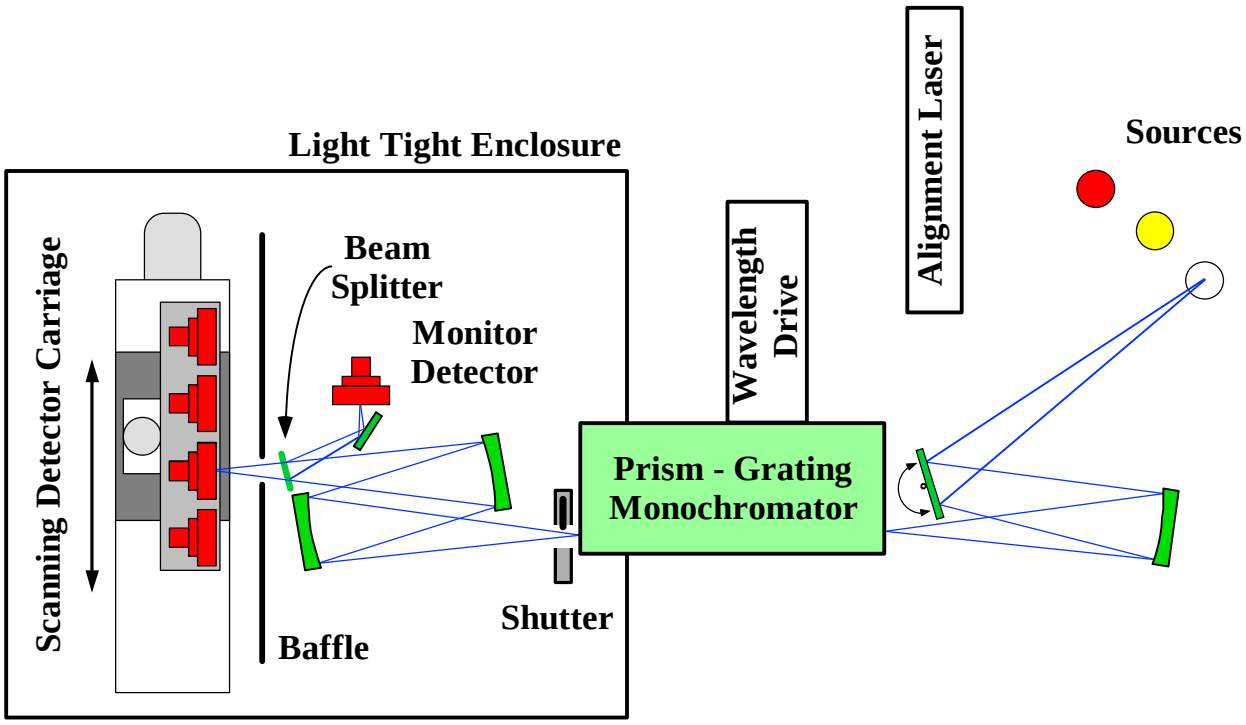

Figure 4.1. Visible to Near-Infrared Spectral Comparator Facility (Vis/NIR SCF).

4.1.1 Vis/NIR Source

Typically the Vis/NIR SCF uses a 100 W (12 V) quartz-halogen lamp that is constant-voltage controlled for stability. The lamp is used over the spectral range of 350 nm to 1800 nm. An FEL lamp, tungsten strip lamp, xenon arc lamp, argon arc, or alignment laser can be used as a source in the Vis/NIR comparator as well. The spectral output flux (at the detector) of the 100 W quartz-halogen lamp with the Vis/NIR SCF is shown in figure 4.2.

<u>Safety considerations</u>

Quartz-halogen lamps, lasers, and arc sources are potential eye hazards. Care is taken to never look directly into any of the sources or the laser beam. Shields mounted on the side of the optical table inhibit direct visual contact with the sources used with the comparator. The lasers used for alignment are Laser Safety Class II. Protective eyeware is worn when working in proximity to these sources.

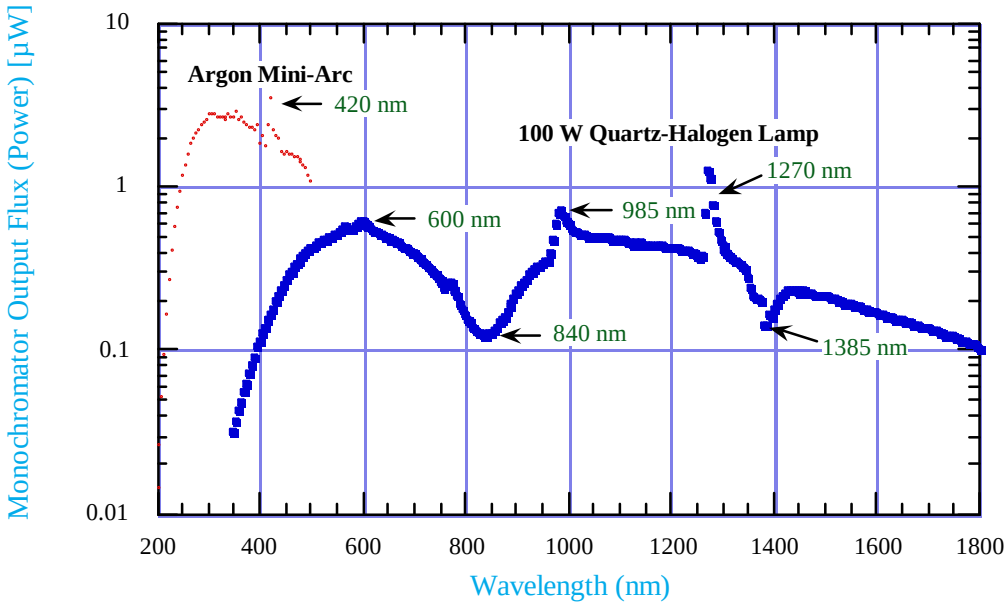

Figure 4.2. Spectral output flux of the UV and visible to near-IR monochromators. The argon mini-arc data are from the UV monochromator and 100 W quartz-halogen lamp data are from the Vis/NIR monochromator.

4.1.2 Vis/NIR Monochromator

The visible comparator uses a prism-grating monochromator, a NIST modified Cary-14, which employs a 30° fused silica prism in series with a 600 lines per mm echelette grating. The monochromator's spectral range is 186 nm to 2.65 µm. The spectral range used in the detector characterization facility is 350 nm to 1800 nm. In the typical measurement configuration, the monochromator slits are set to 1.1 mm with a bandpass of 4 nm. A circular aperture of 1.1 mm diameter just past the exit slit determines the beam size. The exit beam is f/9. The monochromator has a stray light rejection of 10^{-8}. Greater than 99 % of the beam flux lies within an area of 1.6 mm diameter around the optical axis.

4.1.3 Vis/NIR Optics

A 46 mm x 61 mm flat mirror rotates on an automated stage for source selection. The source is imaged by a stationary 15.24 cm diameter spherical mirror onto the entrance slit of the monochromator. A shutter, with a 25 mm diameter aperture, is placed inside the enclosure past the monochromator exit slit and aperture.

Two 15.24 cm diameter spherical mirrors and two 7.62 cm diameter flat mirrors image the exit aperture of the monochromator with 1:1 magnification onto the detector. The two flat mirrors used to optically fold the system are not shown in figure 4.1. Mirrors are used to prevent chromatic aberrations, and the astigmatism of the spherical mirrors is corrected (to first order) by tilting the second spherical mirror perpendicular to the plane of the first spherical mirror [30].

4.1.4 Vis/NIR Translation Stages - Detector Positioning

The Vis/NIR comparator uses two orthogonal linear positioning stages to translate the test detectors and working standard detectors. The horizontal stage travel range is 400 mm with a manufacturer specified resolution of 0.1 µm and an accuracy of 0.2 µm per 100 mm. The vertical stage travel range is 50 mm with a manufacturer specified resolution of 0.1 µm and an accuracy of 0.25 µm per 25 mm.

Each detector can be translated along the optical axis for focusing. A gimbal mount allows the rotation and tilt of each detector to be adjusted perpendicular to the optical axis.

4.1.5 Vis/NIR Working Standards

The visible working standards (Vis WS) are four Hamamatsu S1337-1010BQ silicon photodiodes with fused quartz windows. This is a p-n photodiode with a 1 cm^2 active area. The Hamamatsu S1337 diode is a popular diode for radiometric standards, and the linearity, uniformity, and stability of the Hamamatsu S1337 diode has been documented in many places [31, 32]. The Vis WS are normally used for 350 nm to 1100 nm measurements. For near-infrared measurements (700 nm to 1800 nm), four EG&G Judson J16TE2-8A6-R05M-SC temperature-controlled germanium photodiodes are used as working standards (Ge WS). This is a p-n photodiode with a 5 mm diameter active area and a wedged sapphire window. Typically, two working standards are used for each spectral comparison measurement. The second working standard is used as a "check" standard.

4.1.6 Beam Splitter and Monitor Detector

Variations in the source intensity are corrected by using a beam splitter and monitor detector as discussed in section 3.2.3. The beam splitter is a 50.8 mm x 50.8 mm flat fused quartz plate. Hamamatsu S1337-1010BQ and EG&G Judson J16TE2-8A6-R05M-SC photodiodes are used as monitor detectors. The monitor detector is typically the same type as the working standard used for the measurement. A 35 mm x 46 mm flat oval mirror is used to optically fold the monitor beam to a convenient physical location for the monitor.

4.1.7 Alignment Lasers

Two HeNe lasers are aligned to the optical axis of the Vis/NIR comparator defined by the monochromator. One laser is located in one of the source positions and is typically used to align the detectors. The other is located inside the enclosure and is pointed "backwards" through the comparator to align the sources. It is not shown in figure 4.1.

4.1.8 Enclosure

Each comparator has a light tight enclosure to eliminate the background light from the room. This is essential for the routine dc (optically unmodulated) measurements. The enclosure is a box that sits on the optical table. Several doors allow easy access to the equipment and detectors. The enclosure houses the test detectors, working standards, monitor detector, and associated electronics, including the amplifiers. The horizontal and vertical translation stages and the exit optics are housed inside the enclosure as well.

The enclosure also reduces the amount of dust settling on the detectors and exit optics. An exhaust fan is used to regulate the environment inside of the enclosure, and the temperature inside the enclosure is monitored.

4.2 Ultraviolet (UV) Comparator Description

The Ultraviolet Spectral Comparator Facility (UV SCF) is a monochromator-based system that measures the uniformity and absolute spectral responsivity of photodetectors in the 200 nm to 500 nm spectral region. The UV SCF is very similar in configuration and operation to the Vis/NIR SCF. Only the differences between the two will be described. A diagram of the UV SCF is shown in figure 4.3.

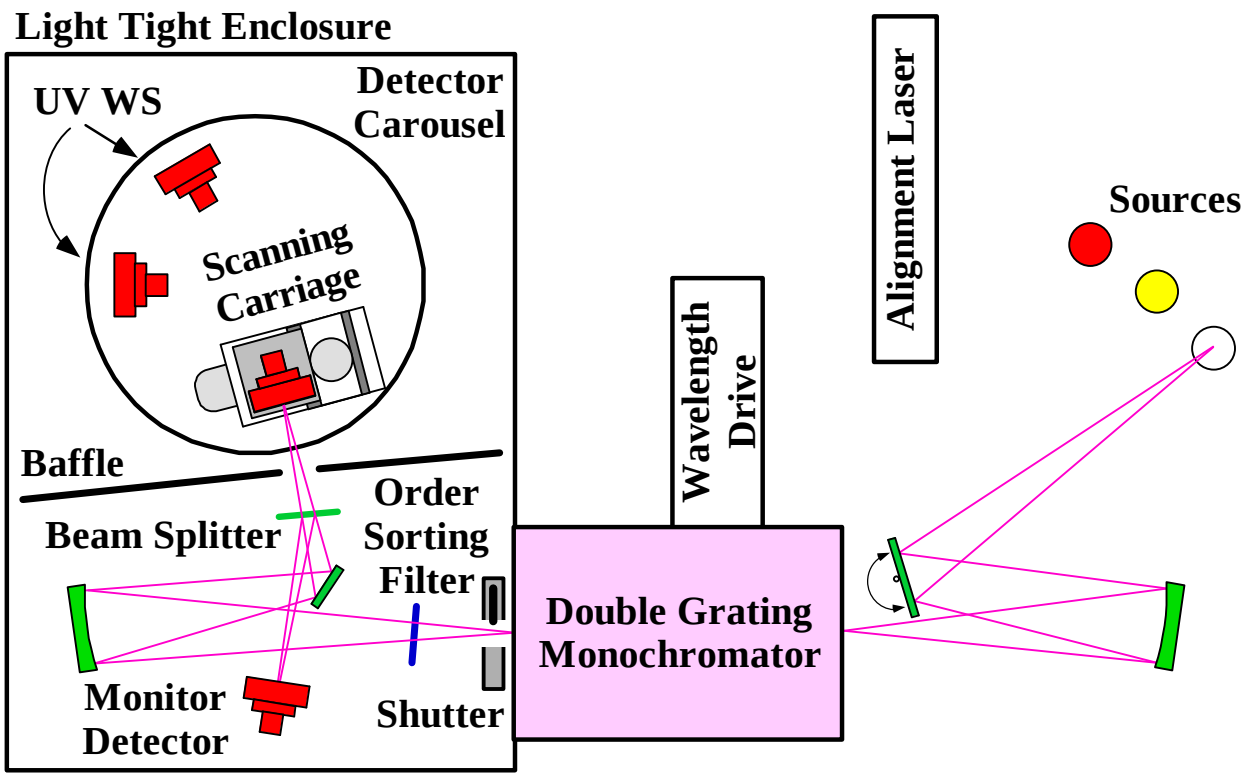

Figure 4.3. Ultraviolet Spectral Comparator Facility (UV SCF).

UV enhanced silicon photodiodes serve as the working standards for the UV SCF. A rotary stage is used in the UV SCF and currently only one test detector at a time can be measured. The test and working standard detectors are fixed onto optical mounts that rotate and tilt. But only the test detector can automatically be positioned in the horizontal and vertical planes. The working standards are positioned manually. Typically an argon arc is used as the source in the UV SCF.

4.2.1 UV Source

The UV SCF primarily uses a NIST-designed argon mini-arc as its source over the 200 nm to 500 nm spectral range. The argon mini-arc was developed at NIST as a secondary spectral radiance standard and has been well characterized [33]. The argon mini-arc is an intense, uniform

uv source, with argon gas flowing through the arc structure at ≈ 35 kPa. The arc can be operated from 30 A to 100 A, but is typically operated at ≈ 40 A (and 60 V). The arc is cooled using the normal facility 5.6 °C (42 °F) chilled water. The water runs through plastic nonconducting tubing. An FEL lamp, tungsten strip lamp, xenon arc lamp, 100W quartz-halogen lamp, or alignment laser can be used as a source in the UV comparator as well. The spectral output flux (at the detector) of the argon mini-arc with the UV SCF is shown in figure 4.2.

Safety considerations

UV filtering safety glasses are worn whenever the argon mini-arc source is lit. Even with safety glasses on, the argon mini-arc is never viewed directly. Shields mounted on the side of the optical table inhibit direct visual contact with the sources. Since very high currents are used, extra precautions are taken when using the arc. Care is taken to avoid accidental contact with the arc electrical contacts and to insulate the arc from the optical table (and surroundings). Also, to avoid overheating the arc and electrical shorts, attention is paid that the cooling water is flowing before the arc is turned on and that no water leaks exist. Nonconducting plumbing is always used. The alignment lasers are Laser Safety Class II.

4.2.2 UV Monochromator

The UV comparator uses a Spex 1680, 1/4 m, double grating monochromator utilizing 2840 lines per mm gratings. The monochromator's spectral range is 180 nm to 1000 nm. The spectral range used in the detector comparator facility is 200 nm to 500 nm. In the typical measurement configuration, the entrance and exit slits are circular 1.5 mm diameter apertures with a bandpass of 4 nm. The exit beam is f/5. Greater than 99 % of the beam flux lies within an oval area of diameters 2.0 mm and 2.5 mm around the optical axis.

4.2.3 UV Optics

A 10.16 cm diameter flat mirror on a rotary stage is used for source selection. The source is imaged by a stationary 15.24 cm diameter spherical mirror onto the entrance slit of the monochromator. A shutter, with a 25 mm diameter aperture, is placed after the monochromator exit slit inside the enclosure.

One 15.24 cm diameter spherical mirror and one 7.62 cm (3 in) diameter flat mirror images the exit aperture of the monochromator with 1:1 magnification. Mirrors are used to prevent chromatic aberrations.

4.2.4 UV Translation Stages - Detector Positioning

The UV comparator has optical mounts for one test detector and two working standard detectors on a rotary positioning stage. The maximum travel of the rotary stage is 360° with a manufacturer specified resolution of 0.001° and an accuracy of 0.0014°. The test detector is mounted on two automated orthogonal linear translation stages. The stages have a travel range of 50 mm with a manufacturer specified resolution of 0.1 µm and an accuracy of 0.25 µm per 25 mm.

The working standard detectors are mounted on two manual orthogonal linear translation stages. Each detector is mounted to allow its position to be adjusted along the optical axis (focus). A gimbal mount allows the rotation and tilt of each detector to be adjusted perpendicular to the optical axis.

4.2.5 UV Working Standards

The ultraviolet working standards (UV WS) are four UDT Sensors UV100 silicon photodiodes with quartz windows and 1 cm^2 circular active areas. The UV100 is an inverted channel diode with enhanced resistance to UV radiation damage. Typically two working standards are used for each spectral comparison measurement.

4.2.6 Beam Splitter and Monitor Detector

The beam splitter is a 50.8 mm diameter flat quartz plate. A UDT Sensors UV100 photodiode is the monitor detector.

4.2.7 Alignment Lasers

Similar to the Vis/NIR SCF, two HeNe lasers are used to align the optical path of the UV comparator. The second laser is not shown in figure 4.3.

4.2.8 Enclosure

The UV SCF enclosure is similar in design and construction to that of the Vis/NIR SCF.

4.3 Electronics

4.3.1 Electronics - Signal Measurement

This section describes the electronics used with the UV SCF and Vis/NIR SCF for detecting and amplifying the signals from the photodetectors. The electronics for both comparators are identical with some equipment shared between the two facilities. Only the Vis/NIR SCF will be described and the differences between the comparators will be noted.

Figure 4.4 shows a block diagram of the typical setup for measurements in the Vis/NIR SCF. The design of the electronics and control of the UV SCF is very similar to the Vis/NIR SCF. Four NIST built and characterized amplifiers are housed in one module for convenience and a separate single amplifier is used with the monitor detector. The digital voltmeters (DVMs) are computer controlled via an IEEE-488 bus. The two DVMs simultaneously measure the signals from the monitor and one of the four detectors that can be moved into the SCF beam. One DVM has a multiplexed input for selecting any of four amplifier channels or temperature monitoring inputs. (Some detectors have temperature monitoring circuitry that produces a voltage signal proportional to their temperature.)

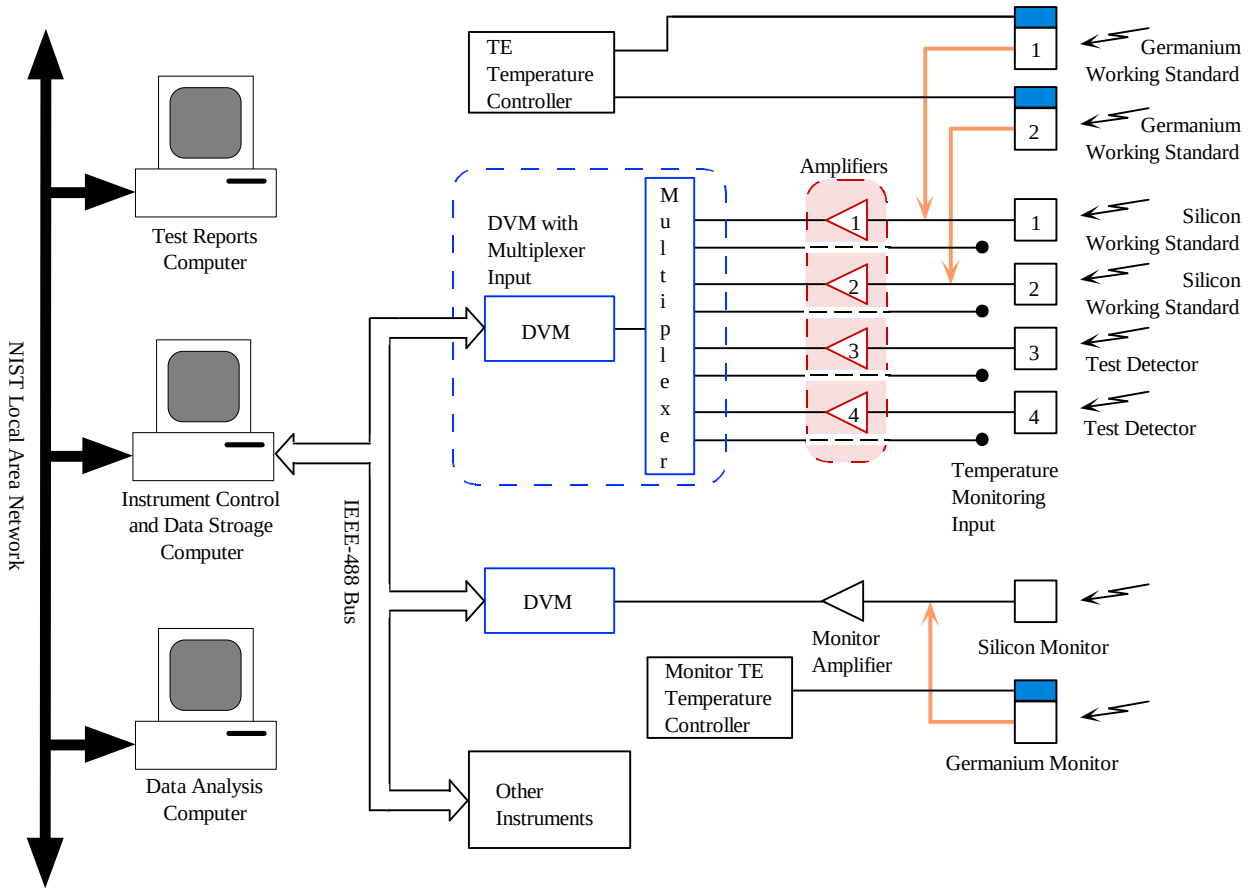

Figure 4.4. Vis/NIR detector, amplifier, DVM, and computer control block diagram.

The amplifiers are identical in design and operate with gains of 10^4 $V{\cdot}A^{-1}$ to 10^9 $V{\cdot}A^{-1}$. References [34 and 35] and several titles in the bibliography describe similar transimpedance amplifiers and their operation. The schematic for the precision transimpedance (I/V) amplifiers used in both the UV and Vis/NIR SCFs is shown in figure 4.5.

Figure 4.6 shows a block diagram for chopped (ac) measurements. Four additional pieces of equipment are required: two lock-in amplifiers, an optical chopper, and a signal multiplexer. In this configuration, the outputs of the four amplifiers from the detectors are fed through the multiplexer and then to a lock-in amplifier. The monitor signal is fed straight from the amplifier to the lock-in. Both lock-ins are run in a mode where the phase (which remains constant) is set to zero, thus the only output signal is the signal magnitude. This signal is sent to the appropriate DVM. The DVM input is multiplexed as before with the temperature monitoring inputs. A discussion of the frequency dependent gain characteristics for similar photodiodes and amplifiers is found in Ref. [36].

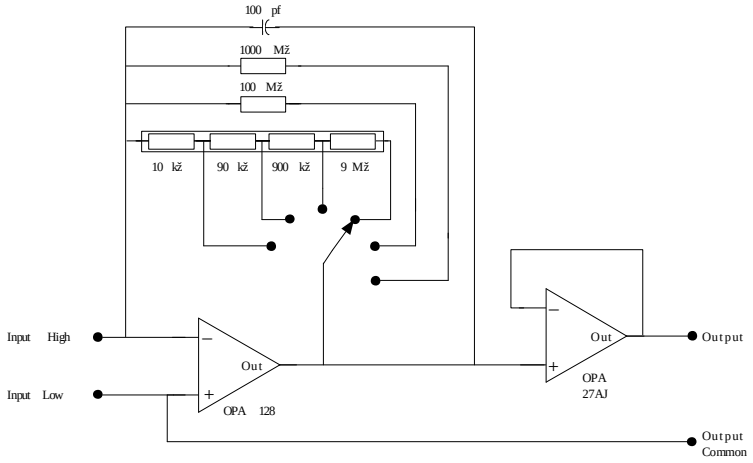

Figure 4.5. NIST SCF precision transimpedance (I/V) amplifier circuit.

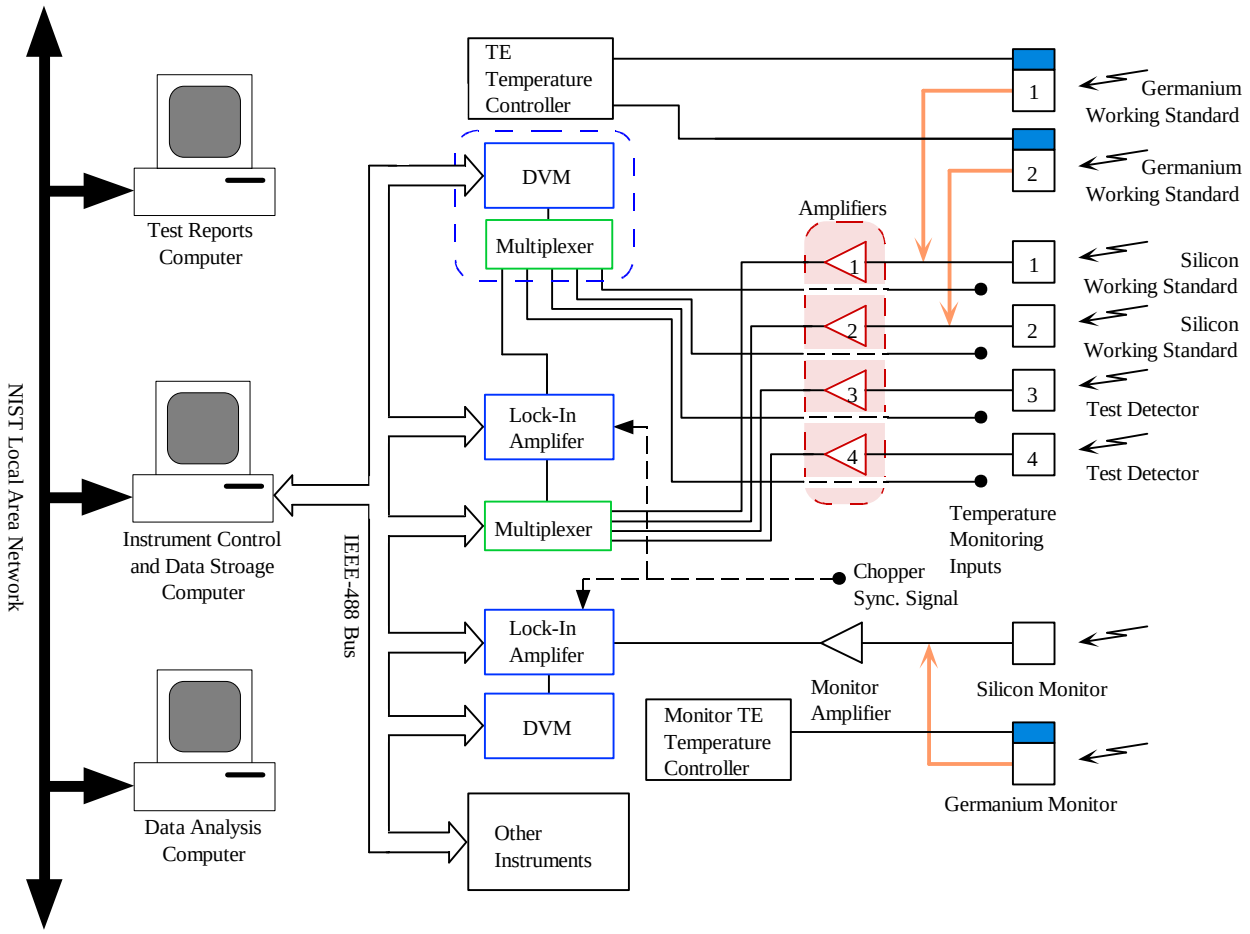

Figure 4.6. Vis/NIR detector, amplifier, lock-in, DVM, and computer control block diagram.

4.3.2 Electronics - Auxiliary Equipment

In both configurations, temperature-controlled germanium photodiodes can be used which require the use of the thermoelectric (TE) temperature controllers shown in figures 4.4 and 4.6. The following electronics not previously mentioned are also used routinely: a 4-channel TE temperature controller for the germanium working standards; a TE temperature controller for the germanium monitor; a digital I/O control unit for the optical shutter; and laboratory environmental monitoring system. The environmental monitoring system measures the temperature in each comparator enclosure, the laboratory temperature, relative humidity, barometric pressure, and the electrical power line voltage and frequency.

5. Absolute Spectral Responsivity Scale Realization

This section describes how the NIST absolute spectral responsivity scale and its traceability to the HACR are determined. First, the operation of the HACR and the scale transfer to the trap detectors are briefly reviewed. Then the transfer of the scale from the trap detectors to the visible working standards is described. Finally, the extension of the scale to the UV and near-IR working standards using a pyroelectric detector is explained. The scale realizations are planned annually.

5.1 Transfer from HACR to Traps (405 nm to 920 nm)

The HACR was constructed to improve the accuracy and spectral range of optical power (flux) measurements and is the U.S. primary standard for optical power (fig. 5.1). Cryogenic radiometers are currently used as the primary standard for optical power at other national laboratories [31, 37, 38]. The HACR will be briefly reviewed here. A full description can be found in Ref. [20]. The HACR is an electrical substitution radiometer (ESR) that operates by comparing the temperature rise induced by optical power absorbed in a cavity to the electrical power needed to cause the same temperature rise by resistive (ohmic) heating. Thus the measurement of optical power is determined in terms of the electrical watt in the form of voltage and resistance standards maintained by NIST [39]. Several advantages are realized by operating at cryogenic temperatures (≈5 K) instead of room temperature. The heat capacity of copper is reduced by a factor of 1000, thus allowing the use of a relatively large cavity. Also the thermal radiation emitted by the cavity or absorbed from the surroundings is reduced by a factor of $\approx 10^7$, which eliminates radiative effects on the equilibrium temperature of the cavity. Finally, the cryogenic temperature allows the use of superconducting wires to the heater, thereby removing the non-equivalence of optical and electrical heating resulting from heat dissipated in the wires. The relative combined standard uncertainty of the NIST HACR measurements is 0.021 % [21] at ≈1 mW. The largest components of the uncertainty are those due to the systematic correction for the Brewster angle window transmission and the random error associated with the cavity temperature measurement.

There are drawbacks for making routine measurements of photodetectors with the HACR. Because of its design, the only source that can be used with the HACR is a laser. Equipment setup and measurements with the HACR are very time consuming, typically taking several days for each wavelength. The measurement wavelengths are limited to available laser wavelengths. The power levels used for the highest accuracy measurements with the HACR are ≈0.8 mW which is higher than those desired for typical radiometric applications. Therefore a practical